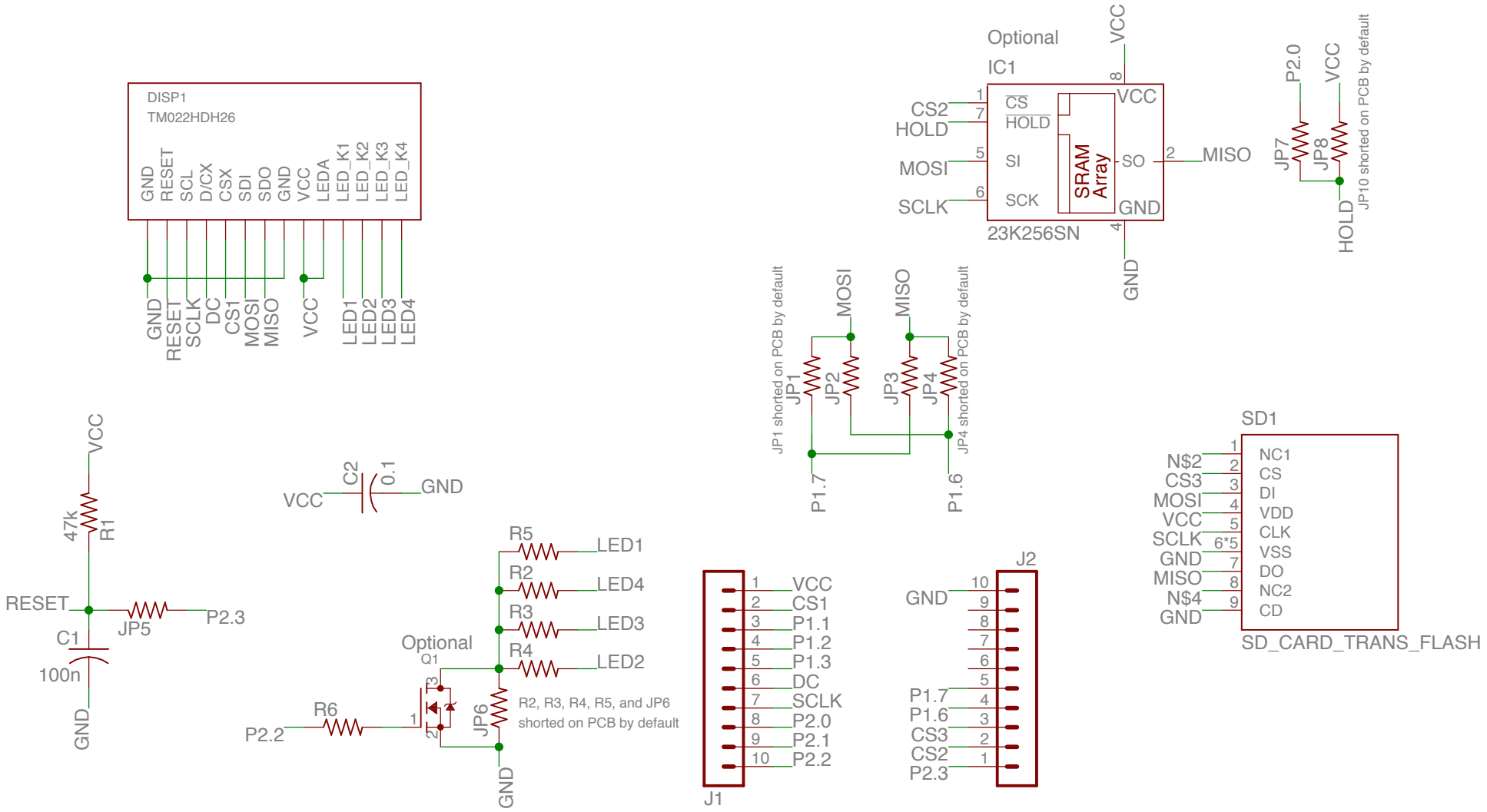
DISP1
TM022HDH26
GND
RESET
SCL
D/CX
CSX
SDI
SDO
GND
VCC
LEDA
LED_K1
LED_K2
LED_K3
LED_K4
GND
RESET
SCLK
DC
CS1
MOSI
MISO
VCC
LED1
LED2
LED3
LED4
Optional
IC1
VCC
CS2
HOLD
MOSI
SCLK
CS
HOLD
SI
SCK
VCC
SO
GND
SRAM Array
MISO
23K256SN
GND
P2.0
VCC
JP7
JP8
HOLD
JP10 shorted on PCB by default
JP1 shorted on PCB by default
JP1
JP2
JP3
JP4
JP4 shorted on PCB by default
MOSI
MISO
P1.7
P1.6
SD1
N$2
CS3
MOSI
VCC
SCLK
GND
MISO
N$4
GND
NC1
CS
DI
VDD
CLK
VSS
DO
NC2
CD
SD_CARD_TRANS_FLASH
VCC
47k
R1
RESET
JP5
P2.3
C1
100n
GND
VCC
C2
0.1
GND
R5
LED1
R2
LED4
R3
LED3
R4
LED2
Optional
Q1
R6
P2.2
JP6
R2, R3, R4, R5, and JP6
shorted on PCB by default
GND
J1
VCC
CS1
P1.1
P1.2
P1.3
DC
SCLK
P2.0
P2.1
P2.2
J2
GND
P1.7
P1.6
CS3
CS2
P2.3